**CONCORDE BATTERY CORPORATION**
2009 San Bernardino Road
West Covina, CA 91790
Phone: 626-813-1234
www.concordebattery.com

TO: HOLDERS OF COMPONENT MAINTENANCE MANUAL
FOR RG-380E/44 H SERIES MAIN AIRCRAFT BATTERY(CMM 24-30-18)

# DOCUMENT NO. 5-0518
# REVISION A DATED JUL 21/2015

## HIGHLIGHTS

Changes from the previous revision are highlighted in the following table:

| Page(s) | Description of Change | Effectivity |
|---|---|---|
| INTRO-1 | Added VRSLA to Definitions in 3.B. | All Models |
| INTRO-3 | Added to 4.A: “and never “jump start” an aircraft that has a “dead” or discharged battery.” | All Models |
| 101 | Added “Main” before Turbine Engines in 1.A. and 1.B. Changed wording from “between 85% and 90%” to “90% or below and not less than 85%” in 1.A.1.c, 1.A.2.c, 1.B.1.c, and 1.B.2.c. | All Models |
| 105 | Revised 7.B to include OCV criteria: If the OCV is 20 volts or above, charge the battery at constant potential per Section 8. If the OCV is below 20 volts, perform the deep discharge recovery charge per Section 10. Revised 7.E to include recording discharge minutes and % capacity on Battery Maintenance Log. Reworded 7.G. | All Models |
| 106 | Revised charge termination criteria in 6.C. Moved Caution (3) and added Note (1). | All Models |
| 107 | Revised Conditioning Charge Procedure to one method only (16 hour constant current at C/10 rate). | All Models |
| 107 | Added new Section 10, Deep Discharge Recovery Procedure. | All Models |
| 601 | Revised 1.C from “The battery assembly should be replaced after 4 years of service life” to: “If the battery is not subjected to capacity testing in accordance with Section 1 under TESTING AND FAULT ISOLATION, it is recommended that the battery be replaced when it reaches 4 years of service life”. | All Models |
| 1501 | Revised 1.B. from “To prolong shelf life…” to “To minimize self-discharge…” Added 1.F, Batteries in storage for longer than 24 months must be capacity tested per Section 7 before being placed in service.” Revised 3.A and 3.B to refer to Table 901 and 902. | All Models |

| | | |
|---|---|---|
| 1502 | Added 5.F. Revised charge termination criteria in 6.C. Revised 7.B to include OCV criteria: If the OCV is 20 volts or above, charge the battery at constant potential per Section 6. If the OCV is below 20 volts, perform the deep discharge recovery charge per Section 9. Revised 7.E to include recording discharge minutes and % capacity on Battery Maintenance Log. Reworded 7.G. | All Models |
| 1503 | Added Note to Section 8 at bottom of page. | All Models |
| 1504 | Revised Section 8, Conditioning Charge Procedure, to one method only (16 hour constant current at C/10 rate). | All Models |
| 1504 | Added new Section 9, Deep Discharge Recovery Procedure. | All Models |
| 1505 | Revised 10.C to include IMDG and DOT regulations. | All Models |
| LP-1 | Added Appendix A, Battery Maintenance Log | All Models |

**CONCORDE BATTERY CORPORATION**
2009 San Bernardino Road
West Covina, CA 91790
Phone: 626-813-1234
www.concordebattery.com

# RG-380E/44 H SERIES MAIN AIRCRAFT BATTERY

# COMPONENT MAINTENANCE MANUAL

| | |
|---|---|
| **Document Number** | **5-0518** |
| **Initial Issue Date** | **Jul 24/2013** |
| **Current Revision Date** | **Jul 21/2015 (Rev. A)** |

## APPLICABILITY

**This CMM is applicable to RG-380E/44 H Series Main Aircraft Batteries including batteries authorized under TSO-C173A. Refer to Document No. 5-0403 for a list of TSO authorized batteries and to Document No. 5-0417 for a list of non-TSO authorized batteries. The latest revision of these documents is posted on our website. If internet access is not available, a printed copy will be furnished upon request.**

*The data/information contained herein has been reviewed and approved for general release on the basis that this document contains no export-controlled information.*

## RECORD OF REVISIONS

| Revision No. | Issue Date | Date Inserted | Inserted By |
|---|---|---|---|
| NC | Jul 24/2013 | | |
| A | Jul 21/2015 | | |
| | | | |
| | | | |
| | | | |
| | | | |
| | | | |
| | | | |
| | | | |
| | | | |
| | | | |
| | | | |
| | | | |

**NOTES:**

**1. THE LATEST REVISION OF THIS CMM IS AVAILABLE FOR DOWNLOAD FROM CONCORDE'S WEBSITE IN PDF FORMAT. IF YOU ARE UNABLE TO ACCESS THE INTERNET, CONTACT CONCORDE AND A PRINTED COPY WILL BE SENT TO YOU (SEE FRONT PAGE OF THIS CMM FOR WEBSITE AND COMPANY CONTACT INFORMATION).**

**2. CHANGES FROM THE PREVIOUS REVISION ARE DENOTED BY A VERTICAL LINE IN THE LEFT MARGIN.**

## RECORD OF TEMPORARY REVISIONS

| Temporary Revision No. | Page Number | Issue Date | By | Date Removed | By |
|---|---|---|---|---|---|
| | | | | | |
| | | | | | |
| | | | | | |
| | | | | | |
| | | | | | |
| | | | | | |
| | | | | | |
| | | | | | |
| | | | | | |

## SERVICE BULLETIN LIST

| SB NUMBER | DESCRIPTION | DATE ISSUED |
|---|---|---|
| | | |
| | | |
| | | |
| | | |
| | | |
| | | |
| | | |
| | | |
| | | |

## LIST OF EFFECTIVE PAGES

| SUBJECT | PAGE(S) | DATE OF LATEST REVSION |
|---|---|---|
| Title Page | TP-1 | Jul 21/2015 |
| Record of Revisions | ROR-1 | Jul 21/2015 |
| Record of Temporary Revisions | RTR-1 | Jul 21/2015 |
| Service Bulletin List | SBL-1 | Jul 21/2015 |
| List of Effective Pages | LOEP-1 | Jul 21/2015 |
| Table of Contents | TOC-1 and TOC-2 | Jul 21/2015 |
| Introduction | INTRO-1 thru INTRO-4 | Jul 21/2015 |
| Description and Operation | 1 thru 3 | Jul 21/2015 |
| Testing and Fault Isolation | 101 thru 107 | Jul 21/2015 |
| Schematic and Wiring Diagrams | 201 | Jul 21/2015 |
| Disassembly | 301 | Jul 21/2015 |
| Cleaning | 401 | Jul 21/2015 |
| Check | 501 | Jul 21/2015 |
| Repair and Disposal | 601 | Jul 21/2015 |
| Assembly | 701 | Jul 21/2015 |
| Fits and Clearances | 801 | Jul 21/2015 |
| Special Tools, Fixtures, Equipment and Consumables | 901 and 902 | Jul 21/2015 |
| Storage (Including Transportation) | 1501 thru 1505 | Jul 21/2015 |
| Appendix A | LP-1 | Jul 21/2015 |

## TABLE OF CONTENTS


| SECTION | PAGE |
|---|---|
| INTRODUCTION | INTRO-1 |
| 1. Scope and Purpose | INTRO-1 |
| 2. Application | INTRO-1 |
| 3. Definitions | INTRO-2 |
| 4. Safety Precautions | INTRO-3 |
| 5. Airworthiness Limitations | INTRO-4 |
| 6. Deviations | INTRO-4 |
| 7. Personnel | INTRO-4 |
| 8. Shop Verification | INTRO-4 |
| DESCRIPTION AND OPERATION | 1 |
| 1. General | 1 |
| 2. Characteristics of RG-380E/44 H Series Main Aircraft Batteries | 3 |
| TEST AND FAULT ISOLATION | 101 |
| 1. Capacity Testing to Verify Continued Airworthiness | 101 |
| 2. Externally Mounted Components | 102 |
| 3. Testing Discharged Batteries | 102 |
| 4. Test Facilities | 102 |
| 5. Tools, Fixtures, Equipment and Consumables | 103 |
| 6. Test Set Up | 103 |
| 7. Capacity Test Procedure | 105 |
| 8. Constant Potential Charge Procedure | 106 |
| 9. Conditioning Charge Procedure | 106 |
| 10. Deep Discharge Recovery Procedure | 107 |
| 11. Fault Isolation Summary | 108 |
| SCHEMATIC AND WIRING DIAGRAMS | 201 |
| DISASSEMBLY | 301 |
| CLEANING | 401 |
| 1. General | 401 |
| 2. Tools, Fixtures, Equipment and Consumables | 401 |
| 3. External Cleaning | 401 |
| 4. Internal Cleaning | 401 |
| CHECK | 501 |
| 1. General | 501 |
| 2. Tools, Fixtures, Equipment and Consumables | 501 |
| 3. External Checking | 501 |
| 4. Internal Checking | 501 |
| REPAIR AND DISPOSAL | 601 |
| ASSEMBLY | 701 |
| FITS AND CLEARANCES | 801 |

| | |
|---|---|
| SPECIAL TOOLS, FIXTURES, EQUIPMENT AND CONSUMABLES | 901 |
| 1. Tools | 901 |
| 2. Fixtures | 901 |
| 3. Equipment | 901 |
| 4. Consumables | 901 |
| ILLUSTRATED PARTS LIST | NOT APPLICABLE |
| SPECIAL PROCEDURES | NOT APPLICABLE |
| REMOVAL | NOT APPLICABLE |
| INSTALLATION | NOT APPLICABLE |
| SERVICING | NOT APPLICABLE |
| STORAGE (INCLUDING TRANSPORTATION) | 1501 |
| 1. Storage Conditions | 1501 |
| 2. Storage Facilities | 1501 |
| 3. Tools, Fixtures, Equipment and Consumables | 1501 |
| 4. Test Set Up | 1501 |
| 5. Preparation for Installation | 1501 |
| 6. Constant Potential Charge Procedure | 1502 |
| 7. Capacity Test Procedure | 1502 |
| 8. Conditioning Charge Procedure | 1503 |
| 9. Deep Discharge Recovery Procedure | 1504 |
| 10. Transportation | 1505 |
| APPENDIX A – BATTERY MAINTENANCE LOG | LP-1 |


## LIST OF FIGURES


| FIGURE | Page |
|---|---|
| Figure 101. Test Set Up for RG® Series Main Batteries With Receptacles | 104 |


## LIST OF TABLES


| TABLE | Page |
|---|---|
| Table 101. List of Test Equipment | 104 |
| Table 102. List of Mating Connectors | 104 |
| Table 901. List of Test Equipment | 901 |
| Table 902. List of Mating Connectors | 901 |

# INTRODUCTION

1. Scope and Purpose
   A. This Component Maintenance Manual (CMM) has been prepared in accordance with Air Transportation of America (ATA) Specification 100. It provides instructions for proper storage, servicing, replacement, repair, and disposal of RG® Series valve regulated lead-acid main aircraft batteries manufactured by Concorde Battery Corporation.

2. Application
   A. Batteries covered by this CMM are designed for engine starting applications and may also be used as an emergency power supply.
   B. Batteries covered by this CMM must have a Heater Control Unit (HCU) installed in order to operate as designed. The battery assembly is considered INCOMPLETE until the TSO HCU is installed. A list of the combinations that are TSO authorized is below:

| ***Compatibility Table*** | | |
|---|---|---|
| ***Complete Battery Assembly*** | ***Line Replaceable Units*** | |
| | ***Battery Component*** | ***Heater Control Unit Component*** |
| RG-380E/44LH-1 | RG-380E/44LH | HCU-1 |
| RG-380E/44LH-2 | RG-380E/44LH | HCU-2 |
| RG-380E/44LH-3 | RG-380E/44LH | HCU-3 |
| RG-380E/44LH-4 | RG-380E/44LH | HCU-4 |
| RG-380E/44LH-7X | RG-380E/44LH | HCU-7X |
| RG-380E/44LSH-1 | RG-380E/44LSH | HCU-1 |
| RG-380E/44LSH-2 | RG-380E/44LSH | HCU-2 |
| RG-380E/44LSH-3 | RG-380E/44LSH | HCU-3 |
| RG-380E/44LSH-4 | RG-380E/44LSH | HCU-4 |
| RG-380E/44LSH-7X | RG-380E/44LSH | HCU-7X |
| RG-380E/44KH-1 | RG-380E/44KH | HCU-1 |
| RG-380E/44KH-2 | RG-380E/44KH | HCU-2 |
| RG-380E/44KH-3 | RG-380E/44KH | HCU-3 |
| RG-380E/44KH-4 | RG-380E/44KH | HCU-4 |
| RG-380E/44KH-7X | RG-380E/44KH | HCU-7X |
| RG-380E/44KSH-1 | RG-380E/44KSH | HCU-1 |
| RG-380E/44KSH-2 | RG-380E/44KSH | HCU-2 |
| RG-380E/44KSH-3 | RG-380E/44KSH | HCU-3 |
| RG-380E/44KSH-4 | RG-380E/44KSH | HCU-4 |
| RG-380E/44KSH-7X | RG-380E/44KSH | HCU-7X |

3. Definitions
   A. Valve regulated lead-acid (VRLA) battery - A lead-acid battery in which there is no free electrolyte and the internal pressure is regulated by a pressure relief valve. This battery requires no maintenance of the liquid level and recombines the gases formed on charge within the battery to reform water. The battery may be used in any attitude without danger of leakage or spilling of electrolyte.
   B. Valve regulated sealed lead-acid (VRSLA) battery – An alternate terminology for a VRLA battery (see definition above).
   C. Rated C1 capacity - The nominal capacity, expressed in Ampere-hours (Ah), obtained from a fully charged battery when discharged at the one hour rate to the specified end point voltage at a temperature of 21 - 25°C (70 - 77°F).
   D. C1 rate – The rate, in amperes, equal to the battery's rated C1 capacity. For example, the C1 rate of a battery rated at 3.5Ah is 3.5 amperes.
   E. End Point Voltage (EPV) - The voltage at which the discharge current is terminated when measuring battery capacity. Unless otherwise stated, the EPV is equal to 20.0 volts (10.0 volts for 12 volt batteries).
   F. Open Circuit Voltage (OCV) – The voltage of the battery at rest (no charging or discharging current present). A stable OCV requires a rest of at least four hours.

4. Safety Precautions
   A. **WARNING: LOW CAPACITY HAZARD.** Aircraft batteries are certified to have a certain minimum capacity for emergency operations in the event of an electrical generator system failure. Never use a battery that has less than 80% of rated capacity and never "jump start" an aircraft that has a "dead" or discharged battery.
   B. **WARNING: ELECTRIC BURN HAZARD.** Lead-acid batteries are capable of delivering high currents if the terminals are shorted. The resulting heat can cause severe burns and is a potential fire hazard. Take the following precautions:
      - Do not place tools or metal objects across battery terminals.
      - Do not wear conductive rings, belt buckles, watches or other jewelry when servicing batteries.
      - Wear insulated gloves and use insulated tools when servicing batteries.
      - Install battery terminal protectors whenever the battery is not connected in the aircraft or to the test equipment.
   C. **WARNING: DANGER OF EXPLODING BATTERIES.** Lead-acid batteries can produce explosive mixtures of hydrogen and oxygen while on charge or discharge, which can explode if ignited. Take the following precautions:
      - Do not smoke, use an open flame, or cause sparking near a battery.
      - Wear proper eye and face protection when servicing batteries.
      - Make sure work area is well ventilated.
      - Do not constant current charge a battery when installed in an aircraft.
      - Connect cables securely to the battery terminals to avoid arcing.
   D. **WARNING: DANGER OF CHEMICAL BURNS.** Lead-acid batteries contain sulfuric acid which can cause severe burns to body tissue**.** Take the following precautions:
      - Never remove or damage vent valves.
      - Avoid contact of the electrolyte with skin, eyes or clothing.
      - Do not touch eyes after touching battery.
      - In the event of acid in the eyes, flush thoroughly with clean cool water for several minutes and get professional medical attention immediately.
      - Refer to battery MSDS for additional information.
   E. **CAUTION: DANGER OF EQUIPMENT DAMAGE.** To prevent damage to the connector, arc burns, or explosion, batteries should never be connected or disconnected while being charged or discharged. Batteries must be connected or disconnected only when the circuit is open. Ensure the aircraft battery switch, external power source, or the charger/analyzer is in the "OFF" position before connecting or disconnecting the battery. Battery terminal protectors should be installed whenever the battery is not connected in the aircraft or to the test equipment.

5. Airworthiness Limitations
   A. For batteries covered by TSO-C173A the following limitation applies:
      The conditions and tests for TSO approval of this battery are minimum performance standards. Those installing this battery, on or in a specific type or class of aircraft, must determine that the aircraft installation conditions are within the TSO standards. TSO articles must have separate approval for installation in an aircraft. The article may be installed only according to 14CFR part 43 or the applicable airworthiness requirements. Nickel-cadmium and lead-acid battery safety concerns include the possibility of fire and venting violently.
   B. For batteries not covered by TSO-C173A, there are no airworthiness limitations associated with the installation of a Concorde valve-regulated lead-acid battery in an aircraft.

   **NOTE: THE AIRWORTHINESS LIMITATIONS SECTION IS FAA APPROVED AND SPECIFIES MAINTENANCE REQUIRED UNDER 14 CFR §§ 43.16 AND 91.403, UNLESS AN ALTERNATIVE PROGRAM HAS BEEN FAA APPROVED.**

6. Deviations
   A. None.

7 Personnel
   A. Only personnel authorized by the cognizant aviation authority are permitted to service Concorde aircraft batteries. For aircraft registered in the USA, 14CFR Part 43.3 applies.

8. Shop Verification
   A. The following sections of this CMM were verified by actual performance:
      - Testing and Fault Isolation – verified 5/14/10.
      - Disassembly – verified 1/4/11.
      - Assembly – verified 1/4/11.

# DESCRIPTION AND OPERATION

1. General

A. Cell Construction:
Concorde aircraft batteries are valve-regulated, recombinant gas, absorbed electrolyte, lead acid batteries. The cells are sealed with a pressure relief valve that prevents gases within the battery from escaping. The positive and negative plates are sandwiched between layers of glass mat consisting of glass micro fibers of varying length and diameter. This blend features superior wicking characteristics and promotes maximum retention of the electrolyte. Electrolyte is absorbed and held in place by the capillary action between the fluid and the absorptive glass mat (AGM) fibers. By design, the AGM separator is only about 90-95% saturated with electrolyte. The void space provides the channels by which oxygen travels from the positive to the negative plates during charging. When the oxygen gas reaches the negative plate, it reacts with lead to form lead oxide and water. This reaction at the negative plate suppresses the generation of hydrogen that otherwise would come off the negative plate. In this manner, virtually all of the gas is recombined inside the cell, eliminating the need to add water, resulting in “maintenance free” operation.

B. Grids and Plates:
Each cell of a storage battery has positive and negative plates arranged alternately, insulated from each other by separators. Each plate consists of a framework, called the grid, and a lead paste compound called active material. The grid is cast from a lead alloy. A heavy outside frame adds strength to the plate for good vibration and shock durability. The small horizontal and vertical wires support the active material. These wires also act as conductors for the current. The lead paste compound (active material) is applied to the grid in much the same manner as plaster is applied to a lath wall. A different paste formula is used for the positive and negative plates.

C. Plate Groups:
Plate groups are made by joining a number of similar plates to a common terminal post by means of a plate strap. The capacity of a battery is determined by the number and size of plates in a group. Each plate is made with a lug at the top which is fused to the strap. A positive group consists of a number of positive plates connected to a plate strap and a negative group consists of a number of negative plates connected in the same manner. The two groups meshed together with separators between the positive and negative plates constitute a cell element.

D. Separators:
The main separator material is made of glass microfibers and is commonly called absorptive glass mat (AGM). This material is extremely porous so it retains a high volume of electrolyte and provides a minimum of resistance to the ions passing through it. It is also highly wettable and resists chemical attack from the electrolyte. The AGM is wrapped around the positive plates to insulate them from the negative plates. An extra layer of micro porous polyethylene surrounds the AGM layer to impart extra puncture resistance and improve battery durability. This dual AGM/polyethylene separator system is a unique feature of Concorde's RG® Series batteries.

E. Cell Containers
After the cell elements are assembled, they are placed in a container made of plastic. The plastic used is selected for its high resistance to sulfuric acid, low gas permeability and high impact strength. In many battery models, the container is comprised of a monoblock that houses multiple cells in a single container (for example, 4, 6 and 12 cell monoblocks are common).

F. Cell Covers
The assembled cell or monoblock has a cover made of plastic material similar to that of the cell container. The cell or monoblock cover has holes through which the terminal posts extend and it also includes the pressure relief valve(s). The cover is permanently sealed to the cell or monoblock container after the plate groups are installed.

G. Electrolyte
The assembled cell or monoblock contains an electrolyte consisting of a mixture of sulfuric acid and water. The electrolyte is absorbed within the pores of the plates and AGM separator. Unlike flooded (vented) cells there is no "free" electrolyte. Therefore, the battery is nonspillable even when turned upside down.

H. Theory of Operation
A chemical reaction takes place when a battery is being charged or discharged, as represented by the following equation:

**Simplified lead acid electrochemical reaction**

| **Discharge →** | | **← Charge** |
|---|---|---|
| $PbO_2 + Pb + 2H_2SO_4$ | $\leftrightarrow$ | $2PbSO_4 + 2H_2O$ |

On discharge, lead dioxide ($PbO_2$) of the positive electrode and sponge lead (Pb) of the negative electrode are both converted to lead sulfate ($PbSO_4$) freeing two electrons. On charge, the lead sulfate in the positive electrode is converted to lead dioxide ($PbO_2$) and the lead sulfate in the negative electrode is converted to sponge lead. The charge process also produces some oxygen at the positive electrode and some hydrogen at the negative electrode. The electrolyte, sulfuric acid ($H_2SO_4$), is an active component in the reaction at both electrodes.

When flooded (vented) batteries are on charge, the oxygen generated at the positive plates escapes from the cell. Concurrently, at the negative plates, hydrogen is generated from water and escapes from the cell. The overall result is the gassing of the cells and water loss. Therefore, flooded cells require periodic water replenishment.

**<u>CAUTION</u>: DO NOT REMOVE THE PRESSURE RELIEF VALVES ON AN RG® BATTERY AND DO NOT ADD WATER OR ELECTROLYTE. THE RECOMBINANT GAS DESIGN ELIMINATES THE NEED TO REPLENISH WATER AND ELECTROLYTE. REMOVING THE PRESSURE RELIEF VALVE VOIDS THE WARRANTY.**

When valve regulated batteries are on charge, oxygen combines chemically with the lead at the negative plates in the presence of sulfuric acid to form lead sulfate and water. This oxygen recombination suppresses the generation of hydrogen at the negative plates. Overall, there is minimal water loss during charging. A very small quantity of water may be lost as a result of self-discharge reactions. However, such loss is so small that no provision need be made for water replenishment. The battery cells have a pressure relief safety valve that may vent if the battery is overcharged.

2. <u>Characteristics of RG-380E/44 H Series Main Aircraft Batteries</u>

   A. The RG-380E/44 H Series of main aircraft batteries consist of 12 cells connected in series to make a nominal 24VDC battery. The cells are contained in a plastic inner container and a metallic outer container equipped with electrical receptacles for mating to the aircraft. The H Series batteries contain heaters to warm the batteries for operation in extreme cold temperature environments.
   B. Technical characteristics of the various models are detailed on Concorde's website (see front page of this CMM).
   C. If internet access is not available, contact Concorde for assistance (see front page of this CMM).

## TESTING AND FAULT ISOLATION

1. Capacity Testing to Verify Continued Airworthiness
   A. Batteries Used to Start Main Turbine Engines:
      1. Operating less than 1000 hours per year.
         a. Initial check at 12 months after initial installation (± 1 month).
         b. As long as the capacity is above 90%, subsequent capacity checks every 6 months in service (± 1 month).
         c. If the capacity is 90% or below and not less than 85%, subsequent checks every 3 months in service (± 1 month).
         d. If the capacity is less than 85%, remove battery from service.
      2. Operating 1000 hours per year or more:
         a. Initial check at 1000 hours after initial installation (± 100 hours).
         b. As long as the capacity is above 90%, subsequent capacity checks every 500 hours in service (± 100 hours).
         c. If the capacity is 90% or below and not less than 85%, subsequent checks every 250 hours in service (± 100 hours).
         d. If the capacity is less than 85%, remove battery from service.
   B. Batteries Not Used to Start Main Turbine Engines:
      1. Operating less than 1000 hours per year:
         a. Initial check at 12 months after initial installation (± 1 month).
         b. As long as the capacity is above 90%, subsequent capacity checks every 12 months in service (± 1 month).
         c. If the capacity is 90% or below and not less than 85%, subsequent checks every 6 months in service (± 1 month).
         d. If the capacity is less than 85%, remove battery from service.
      2. Operating 1000 hours per year or more:
         a. Initial check at 1000 hours after initial installation (± 100 hours).
         b. As long as the capacity is above 90%, subsequent capacity checks every 1000 hours in service (± 100 hours).
         c. If the capacity is 90% or below and not less than 85%, subsequent checks every 500 hours in service (± 100 hours).
         d. If the capacity is less than 85%, remove battery from service.

**WARNING: CAPACITY CHECKS PROVIDE ASSURANCE OF CONTINUED AIRWORTHINESS OF THE BATTERY. ADJUSTMENTS TO THE FREQUENCY OF CAPACITY CHECKS SHOULD BE BASED ON CAREFUL CONSIDERATION OF FACTORS THAT AFFECT BATTERY LIFE. THESE FACTORS INCLUDE OPERATING PATTERNS, ENVIRONMENTAL CONDITIONS, AND CONFIGURATION OF THE AIRCRAFT ELECTRICAL SYSTEM. IF ANY OF THESE FACTORS CHANGE, THE BATTERY LIFE SHOULD BE RE-ESTABLISHED USING THE ORIGINAL CAPACITY CHECK SCHEDULE.**

**NOTES:**

**1. THE CAPACITY CHECK INTERVALS SPECIFIED ABOVE ARE GENERAL RECOMMENDATIONS SUITABLE FOR MOST APPLICATIONS. THE INTERVALS MAY BE ADJUSTED FOR A SPECIFIC AIRCRAFT OR FLEET ONCE THE AVERAGE BATTERY LIFE IS ESTABLISHED.**

**2. CAPACITY CHECKS ARE OPTIONAL IF THE BATTERY'S FUNCTIONALITY DOES NOT AFFECT AIRWORTHINESS OF THE AIRCRAFT.**

2. Externally Mounted Components
   A. Heater Control Units: These battery models are equipped with externally mounted heater control units (HCUs). Instructions for inspection and testing of Concorde HCUs and the associated heating element within the battery are contained in separate CMMs for each HCU. These supplements are available on Concorde's website (see front page of this CMM). If internet access is not available, contact Concorde for assistance.

3. Testing Discharged Batteries
   A. If a battery is discharged below the recommended end point voltage of 20 volts and is not recharged within 24 hours, it should be subjected to a capacity test to assure airworthiness (see Section 7).
   B. After airworthiness is verified, the capacity test schedule may be adjusted using this new date and equipment flight hours as the starting point for the next capacity check interval.

4. Test Facilities
   A. Concorde valve regulated lead-acid (VRLA) batteries may be serviced in any battery facility, including nickel-cadmium service facilities. VRLA batteries are sealed to prevent cross contamination of the electrolyte.

   **WARNING: LEAD-ACID BATTERIES CAN PRODUCE EXPLOSIVE MIXTURES OF HYDROGEN AND OXYGEN WHILE BEING CHARGED OR DISCHARGED. NEVER SERVICE BATTERIES IN AN AIRTIGHT OR SEALED ENCLOSURE AND MAKE SURE WORK AREA IS WELL VENTILATED.**

5. Tools, Fixtures, Equipment and Consumables
   A. Refer to Table 101 for required test equipment.
   B. Refer to Table 102 for mating connectors.

   **NOTE: EQUIVALENT SUBSTITUTES MAY BE USED FOR THESE ITEMS.**

   **CAUTION: CONTACT CONCORDE FOR ASSISTANCE WITH SELECTION OF BATTERY CHARGING EQUIPMENT. SOME BRANDS OF BATTERY CHARGERS WILL DESTROY THE BATTERY.**

6. Test Set Up
   A. Refer to Figure 101 for a schematic of the test set up.
   B. Make the interconnect cabling locally using mating connectors shown in Table 102.

Table 101. List of Test Equipment

| Description | Source | Part No. | Purpose |
|---|---|---|---|
| Electronic Load, capable of constant current at C1 ADC and 20-28 VDC with EPV termination at 20 VDC. | Commercially Available | N/A | Capacity Testing |
| Constant Voltage Power Supply, capable of 28.00 – 28.50 VDC and at least 0.2xC1 ADC output*. | Commercially Available | N/A | Constant Potential Charging |
| Constant Current Power Supply, capable of C1/10 ADC and at least 34 VDC output. | Commercially Available | N/A | Constant Current Charging |
| Digital Multimeter (DMM), capable of 18-34 VDC with accuracy of 1% or better. | Commercially Available | N/A | Measuring OCV |
| Mating Connector | Various | See Table 102 | Connect Battery to Test Equipment |

* The output current of the constant potential charging equipment should be set as high as possible. RG® Series batteries can accept charging rates up to 8xC1.

Table 102. List of Mating Connectors

| Battery Receptacle (Shown on envelope drawing) | Mating Connector (Obtain locally) |
|---|---|
| IEC 60952-2 Type Q<br>MS3509 | MS25182-2 or MS3349-2 |

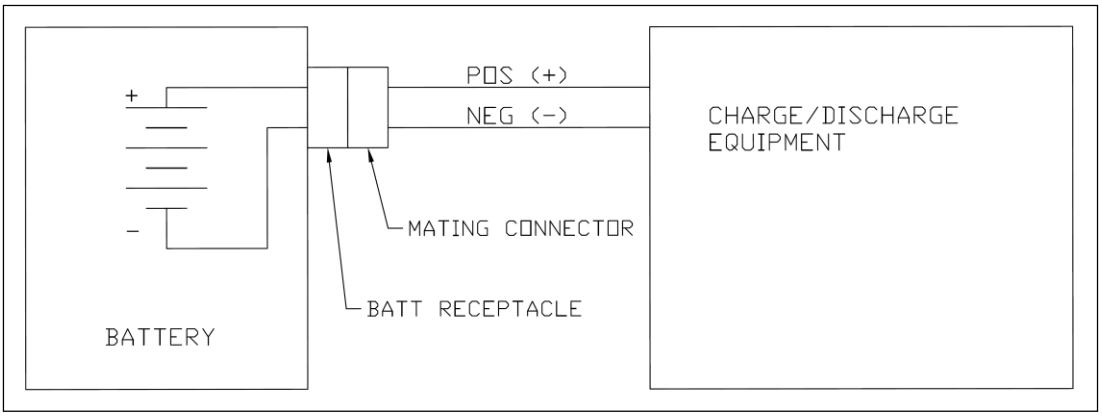


Figure 101. Test Set Up for RG® Series Main Batteries with Receptacles

7. Capacity Test Procedure
   A. If the battery is cold, warm it up to at least 20°C (68°F) before testing.
   B. If the OCV is 20 volts or above, charge the battery at constant potential per Section 8. If the OCV is below 20 volts, perform the deep discharge recovery charge per Section 10.
   C. Connect the battery to the discharge equipment and discharge at the C1 rate on the label (i.e., 42 Amps for a 42 AH battery).
   D. Discharge the battery to an EPV of 20 volts or other EPV specified by the airframe or equipment manufacturer.
   E. Record the minutes to the EPV and the % capacity (% capacity = discharge minutes x 1.667) in the Battery Maintenance Log. An example Battery Maintenance Log is provided in Appendix A; alternate formats are acceptable.
   F. The battery passes the capacity test if the time to the EPV is 51 minutes or greater (85% of rated C1 capacity or greater).
   G. The battery is over 90% of rated capacity if the time to the EPV is greater than 54 minutes.

      **NOTE: AIRFRAME OR ACCESSORY EQUIPMENT MANUFACTURERS MAY SPECIFY A DIFFERENT CAPACITY TEST REQUIREMENT, WHICH SHOULD TAKE PRECEDENCE.**

   H. If the battery passes the capacity test, charge at constant potential per Section 8 and return battery to full state of charge. The battery is acceptable for installation.
   I. If the battery fails the capacity test, perform the conditioning procedure given in Section 9. After the battery has been conditioned repeat the capacity test.
   J. If the battery passes the second capacity test, charge at constant potential per Section 8 and return battery to full state of charge. The battery is acceptable for installation.
   K. If the battery fails the second capacity test, repeat the conditioning charge per Section 9 and repeat the capacity test.
   L. If the battery passes the third capacity test, charge at constant potential per Section 8 and return battery to full state of charge. The battery is acceptable for installation.
   M. If the battery fails the third capacity test, the battery should be replaced.
   N. If the battery gets very hot (greater than 55°C/130°F) during constant potential charging, the battery should be replaced.

8. Constant Potential Charge Procedure

**NOTE: CONSTANT POTENTIAL CHARGING IS THE PREFERRED METHOD OF CHARGING THE BATTERY. IF THE BATTERY DOES NOT PASS THE CAPACITY TEST, THE CONDITIONING CHARGE PROCEDURE SHOULD THEN BE USED.**

A. Connect the battery terminals to the constant potential charging equipment.
B. Apply a constant potential of 28.25 ± 0.25 volts with a current capability of at least 0.2xC1 amperes.

**NOTE: THE OUTPUT CURRENT OF THE CHARGING EQUIPMENT SHOULD BE SET AS HIGH AS POSSIBLE. RG® SERIES BATTERIES CAN ACCEPT CHARGING RATES UP TO 8XC1.**

C. Charge until the charge current falls below 5% of the battery C1 capacity (i.e., 2.1 amperes for a 42AH battery) and then continue charging at the same constant potential for a minimum of 4 more hours.

**NOTE: TERMINATE CHARGING IF THE CHARGE CURRENT DOES NOT FALL BELOW 5% OF THE BATTERY C1 RATING WITHIN 8 HOURS.**

9. Conditioning Charge Procedure

**WARNING: THIS PROCEDURE SHOULD ONLY BE DONE IN A WELL VENTILATED AREA BECAUSE A SIGNIFICANT AMOUNT OF HYDROGEN GAS MAY BE RELEASED FROM THE BATTERY.**

**CAUTION (1): A CONDITIONING CHARGE IS ONLY NECESSARY IF THE BATTERY FAILS THE CAPACITY TEST. THIS PROCEDURE MAY SHORTEN THE BATTERY'S LIFE IF PERFORMED ON A REPETITIVE BASIS.**

**CAUTION (2): THIS PROCEDURE WILL CAUSE THE BATTERY VOLTAGE TO GO AS HIGH AS 34 VOLTS WHICH COULD DAMAGE ELECTRONIC CIRCUITS CONNECTED TO A BATTERY BUS. DO NOT PERFORM A CONDITIONING CHARGE WHILE THE BATTERY IS INSTALLED IN AN AIRCRAFT.**

**CAUTION (3): IF THE BATTERY BECOMES HOT (ABOVE 55°C/130°F) DURING CONSTANT CURRENT CHARGING, STOP THE CURRENT AND ALLOW THE BATTERY TO COOL TO ROOM TEMPERATURE BEFORE CONTINUING THE CHARGE.**

**NOTE (1): CHARGING EQUIPMENT USED FOR THIS PROCEDURE MUST BE CAPABLE OF OUTPUTTING AT LEAST 34 VOLTS (17 VOLTS FOR 12 VOLT BATTERIES) TO MAINTAIN A CONSTANT CURRENT THROUGHOUT THE ENTIRE CHARGE PERIOD.**

**NOTE(2): IF A BATTERY REQUIRES A CONDITIONING CHARGE TO PASS THE CAPACITY TEST, SUBSEQUENT CAPACITY CHECKS SHOULD BE AT THE INCREASED FREQUENCY SPECIFIED IN PARAGRAPH 1 OF THIS SECTION (3 MONTHS/250 HOURS FOR MAINTURBINE ENGINE BATTERIES OR 6 MONTHS/500 HOURS FOR ALL OTHER BATTERIES)**

A. Discharge the battery at the C1 rate to an EPV of 20 volts. If the battery has already been discharged to the EPV, skip this step.
B. Connect the battery to the constant current charging equipment per Table 101.
C. Charge at a constant current rate of C1 /10 (i.e., 4.2 Amps for a 42 Ah battery) for 16 hours and then discontinue charging. The conditioning charge does not need to be continuous, i.e., pauses may be included. For example, an 8 hour charge on the first day followed by an 8 hour charge on the second day is allowable.
D. After charging, allow the battery to cool down for at least 8 hours or until the battery temperature is within 10°C/18°F of the ambient temperature, then proceed with the capacity test.

10. Deep Discharge Recovery Procedure

**WARNING: THIS PROCEDURE SHOULD ONLY BE DONE IN A WELL VENTILATED AREA BECAUSE A SIGNIFICANT AMOUNT OF HYDROGEN GAS MAY BE RELEASED FROM THE BATTERY.**

**CAUTION (1): THIS PROCEDURE WILL CAUSE THE BATTERY VOLTAGE TO GO AS HIGH AS 34 VOLTS (17 VOLTS FOR 12V BATTERIES) WHICH COULD DAMAGE ELECTRONIC CIRCUITS CONNECTED TO A BATTERY BUS. DO NOT PERFORM A DEEP DISCHARGE RECOVERY CHARGE WHILE THE BATTERY IS INSTALLED IN AN AIRCRAFT.**

**CAUTION (2): IF THE BATTERY BECOMES HOT (ABOVE 55°C/130°F) DURING THE CHARGE, STOP THE CURRENT AND ALLOW THE BATTERY TO COOL TO ROOM TEMPERATURE BEFORE CONTINUING THE CHARGE.**

**NOTE: CHARGING EQUIPMENT USED FOR THIS PROCEDURE MUST BE CAPABLE OF OUTPUTTING AT LEAST 34 VOLTS (17 VOLTS FOR 12 VOLT BATTERIES) TO MAINTAIN A CONSTANT CURRENT THROUGHOUT THE ENTIRE CHARGE PERIOD.**

A. Connect the battery to the constant current charging equipment per Table 101.
B. Charge at a constant current rate of C1/10 (i.e., 4.2 Amps for a battery with a C1 rating of 42 Ah) until the battery voltage reaches 31.0 volts, then continue charging at the same constant current rate for an additional 4 hours. The charge cycle should be continuous when using this method, i.e., no pauses should be included. However, if there is an interruption (e.g., due to a local power outage), continue from where the profile stopped and run to completion.

**NOTE (1): IF THE BATTERY VOLTAGE EXCEEDS 31 VOLTS AT THE BEGINNING OF CHARGE AND THEN DROPS BELOW 31 VOLTS WITHIN 2 HOURS, CONTINUE CHARGING AT CONSTANT CURRENT UNTIL THE VOLTAGE REACHES 31 VOLTS A SECOND TIME. THEN CONTINUE CHARGING FOR AN ADDITIONAL 4 HOURS AS SPECIFIED ABOVE.**

**NOTE (2): IF THE BATTERY VOLTAGE DOES NOT REACH 31 VOLTS WITHIN 24 HOURS, THE CHARGE SHOULD BE TERMINATED.**

C. After the charge is complete, allow the battery to cool down for at least 8 hours or until the battery temperature is within 10°C/18°F of the ambient temperature, then proceed with the capacity test.

11. Fault Isolation Summary

| Symptom | Probable Cause | Corrective Action |
|---|---|---|
| Low voltage / no voltage. | Battery partially or fully discharged. | Perform capacity test. |
| | Battery fuse blown or circuit breaker tripped. | Replace fuse or reset circuit breaker. |
| Battery capacity less than 85% of rating. | Battery cells beyond serviceable life. | Replace battery. |
| Battery does not hold charge. | Battery cells beyond serviceable life. | Replace battery. |
| Battery gets hot during constant potential charging. | Battery cells beyond serviceable life. | Replace battery. |

## SCHEMATIC AND WIRING DIAGRAMS

1. General
   A. Schematic diagrams and/or polarity markings are shown on the envelope drawing of each specific battery model.
   B. The latest approved envelope drawings are available on Concorde's website (see front page of this CMM).
   C. If internet access is not available, contact Concorde for assistance (see front page of this CMM).

## DISASSEMBLY

1. General
   A. Batteries covered by this CMM are equipped with externally mounted heater control units (HCUs). Instructions for replacing HCUs are contained in separate CMMs for each type of HCU. These CMMs are available on Concorde's website (see front page of this CMM). If internet access is not available, contact Concorde for assistance.

## CLEANING

1. General
   A. This section contains general cleaning instructions for Concorde aircraft batteries.
   B. Clean battery when it is being serviced for capacity testing.
   C. Batteries do not need to be disassembled for cleaning.

   **CAUTION: DO NOT USE ANY TYPE OF SOLVENT TO CLEAN THE BATTERY. SOLVENTS MAY DAMAGE THE BATTERY.**

2. Tools, Fixtures, Equipment and Consumables
   A. Consumables: Lint-free shop cloth (commercially available) and tap water (commercially available).

3. External Cleaning
   A. Clean the outside surfaces of the battery with a lint-free shop cloth that is clean, dry, and free of oil.
   B. If the battery has caked-on dirt or grime, use a cloth dampened with tap water, then wipe dry.

4. Internal Cleaning:
   A. Internal cleaning is not required.

## CHECK

1. General
   A. This section contains general checking instructions for Concorde aircraft batteries.
   B. Check battery when it is being serviced for capacity testing.
   C. Batteries do not need to be disassembled for checking.

2. Tools, Fixtures, Equipment and Consumables
   A. None required.

3. External Checking
   A. Check the outside surfaces of the battery and electrical connector(s) for deterioration or corrosion that may affect the battery's operation.
   B. Check the battery for loose or missing fasteners.
   C. Check the identification and informational labels to ensure they are legible and securely attached.
   D. If the above checks reveal items that need attention, repair or replace battery as appropriate.

4. Internal Checking
   A. Internal checks are not required.

## REPAIR AND DISPOSAL

1. General
   A. Batteries covered by this CMM have no internal components that are repairable. The battery assembly must be replaced when internal components (i.e., battery cells) fail or wear out.
   B. Refer to the Section on TESTING AND FAULT ISOLATION to determine if the battery assembly needs to be replaced.
   C. If the battery is not subjected to capacity testing in accordance with Section 1 under TESTING AND FAULT ISOLATION, it is recommend that the battery assembly be replaced when it reaches 4 years of service life.
   D. If external repairs are needed to the battery assembly, have it serviced in an authorized repair facility or contact Concorde for assistance (see front page of this CMM).

2. Disposal
   A. Concorde aircraft batteries contain lead, sulfuric acid, and other hazardous materials. Never discard batteries in the trash or in a landfill.
   B. The battery materials are recyclable. Dispose spent batteries and assemblies in accordance with local ordinances and regulations.
   C. Some batteries are encased in aluminum, stainless steel, or titanium containers, which need to be removed before the rest of the battery is sent to a lead smelter for recycling. Make sure the recycling collector is aware of this requirement.
   D. See battery Material Safety Data Sheet (MSDS) for additional information.

## ASSEMBLY

1. General
   A. Batteries covered by this CMM are equipped with externally mounted heater control units (HCUs). Instructions for replacing HCUs are contained in separate CMMs for each type of HCU. These CMMs are available on Concorde's website (see front page of this CMM). If internet access is not available, contact Concorde for assistance. .

## FITS AND CLEARANCES

1. General
   A. Refer to the envelope drawing for each specific battery model. The envelope drawing provides overall dimensions, mounting provisions, and maximum weight of the battery.
   B. The latest approved envelope drawings are available on Concorde's website (see front page of this CMM).
   C. If internet access is not available, contact Concorde for assistance (see front page of this CMM).

## SPECIAL TOOLS, FIXTURES, EQUIPMENT AND CONSUMABLES

1. Tools
   A. Not applicable.

2. Fixtures
   A. Not applicable.

3. Equipment
   A. Refer to Tables 901 and 902.

   **NOTE: EQUIVALENT SUBSTITUTES MAY BE USED FOR THESE ITEMS**.

4. Consumables
   A. Lint-free cloth (commercially available).
   B. Tap water (commercially available).

Table 901. List of Test Equipment

| **Description** | **Source** | **Part Number** | **Purpose** |
|---|---|---|---|
| Electronic Load, capable of constant current at C1 ADC and 20-28 VDC with EPV termination at 20 VDC. | Commercially Available | N/A | Capacity Testing |
| Constant Voltage Power Supply, capable of 28.0 – 28.5 VDC and at least 0.2xC1 ADC output*. | Commercially Available | N/A | Constant Potential Charging |
| Constant Current Power Supply, capable of C1/10 ADC and at least 34 VDC output. | Commercially Available | N/A | Constant Current Charging |
| Digital Multimeter (DMM), capable of 18-34 VDC with accuracy of 1% or better. | Commercially Available | N/A | Measuring OCV |
| Mating Connector | Various | See Table 902 | Connect Battery to Test Equipment |

* The output current of the constant potential charging equipment should be set as high as possible. RG® Series batteries can accept charging rates up to 8xC1.

Table 902. List of Mating Connectors

| Battery Receptacle (Shown on envelope drawing) | Mating Connector (Obtain locally) |
|---|---|
| IEC 60952-2 Type Q<br>MS3509 | MS25182-2 or MS3349-2 |

## STORAGE (INCLUDING TRANSPORTATION)

1. Storage Conditions
   A. Batteries are serviced and charged at the factory prior to shipment.
   B. To minimize self-discharge, batteries should be stored in a cool location, ideally below 20°C (68°F).
   C. The open circuit voltage (OCV) of a fully charged battery is approximately 26.0 volts. As the battery state of charge drops due to self-discharge, its OCV also declines.
   D. Batteries should be boost charged per Section 6 when the OCV declines to 25.0 volts.
   E. Batteries with an OCV below 25.0 volts must be capacity tested per Section 7 before being placed in service.
   F. Batteries in storage for longer than 24 months must be capacity tested per Section 7 before being placed in service.

**CAUTION WHEN BATTERIES ARE INSTALLED IN AIRCRAFT DURING STORAGE (OR EXTENDED PERIODS OF NON-USE), IT IS BEST TO DISCONNECT THE BATTERY CONNECTOR. THIS PRACTICE WILL ELIMINATE UNNECESSARY DRAIN ON THE BATTERY WHEN PARASITIC LOADS ARE PRESENT. OTHERWISE, THE BATTERY SERVICE LIFE MAY BE ADVERSELY AFFECTED.**

2. Storage Facilities
   A. Concorde valve regulated lead-acid aircraft batteries may be stored and serviced in any battery facility, including nickel-cadmium service facilities. These batteries are sealed to prevent cross contamination of the electrolyte.
   B. Lead-acid batteries can produce explosive mixtures of hydrogen and oxygen while being charged or discharged. Never service batteries in an airtight or sealed enclosure and make sure the work area is well ventilated.

3. Tools, Fixtures, Equipment and Consumables
   A. Refer to Table 901 for a list of test equipment.
   B. Refer to Table 902 for mating connectors.

4. Test Set Up
   A. Refer to Figure 101.

5. Preparation for Installation
   A. Remove battery from the shipping carton and visually inspect the battery for signs of damage. Do not use the battery if it appears to be damaged, contact Concorde for assistance.
   B. Measure the battery's open circuit voltage (OCV) with a DMM.
   C. If the OCV equals or exceeds 25.5 volts, the battery can be installed in the aircraft without boost charging.

D. If the OCV equals or exceeds 25.0 volts and is less than 25.5 volts, apply a boost charge per Section 6. The battery can then be installed in the aircraft.
E. If the OCV is below 25.0 volts, perform a capacity test per Section 7 before installing in the aircraft.
F. If the battery has been in storage for longer than 24 months, perform a capacity test per Section 7 before installing in the aircraft.

6. Constant Potential Charge Procedure

**NOTE: CONSTANT POTENTIAL CHARGING IS THE PREFERRED METHOD OF CHARGING THE BATTERY. IF THE BATTERY FAILS THE CAPACITY TEST, THE CONDITIONING CHARGE PROCEDURE SHOULD BE USED.**

A. Connect the battery terminals to the constant voltage charging equipment.
B. Apply a constant potential of 28.25 ± 0.25 volts with a current capability of at least 0.2xC1 amperes.

**NOTE: THE OUTPUT CURRENT OF THE CHARGING EQUIPMENT SHOULD BE SET AS HIGH AS POSSIBLE. RG® SERIES BATTERIES CAN ACCEPT CHARGING RATES UP TO 8XC1.**

C. Charge until the charge current falls below 5% of the battery C1 capacity (i.e., 2.1 amperes for a 42AH battery) and then continue charging at the same constant potential for a minimum of 4 more hours.

**NOTE: TERMINATE CHARGING IF THE CHARGE CURRENT DOES NOT FALL BELOW 5% OF THE BATTERY C1 RATING WITHIN 8 HOURS.**

7. Capacity Test Procedure
A. If the battery is cold, warm it up to at least 20°C (68°F) before testing.
B. If the OCV is 20 volts or above, charge the battery at constant potential per Section 6. If the OCV is below 20 volts, perform the deep discharge recovery charge per Section 9.
C. Connect the battery to the discharge equipment and discharge at the C1 rate on the label (i.e., 42 Amps for a 42 AH battery).
D. Discharge the battery to an end point voltage of 20 volts or other EPV specified by the airframe or equipment manufacturer.
E. Record the minutes to the EPV and the % capacity (% capacity = discharge minutes x 1.667) in the Battery Maintenance Log. An example Battery Maintenance Log is provided in Appendix A; alternate formats are acceptable.
F. The battery passes the capacity test if the time to the EPV is 51 minutes or greater (85% of rated C1 capacity or greater).
G. The battery is over 90% of rated capacity if the time to the EPV is greater than 54 minutes.

**NOTE: AIRFRAME OR ACCESSORY EQUIPMENT MANUFACTURERS MAY SPECIFY A DIFFERENT CAPACITY TEST REQUIREMENT, WHICH SHOULD TAKE PRECEDENCE.**

H. If the battery passes the capacity test, charge at constant potential per Section 6 and return battery to full state of charge. The battery is acceptable for installation.
I. If the battery fails the capacity test, perform the conditioning procedure given in Section 8. After the battery has been conditioned repeat the capacity test.
J. If the battery passes the second capacity test, charge at constant potential per Section 6 and return battery to full state of charge. The battery is acceptable for installation.
K. If the battery fails the second capacity test, repeat the conditioning charge per Section 8 and repeat the capacity test.
L. If the battery passes the third capacity test, charge at constant potential per Section 6 and return battery to full state of charge. The battery is acceptable for installation.
M. If the battery fails the third capacity test, the battery should be replaced.
N. If the battery gets very hot (greater than 55°C/130°F) during constant potential charging, the battery should be replaced.

8. Conditioning Charge Procedure

**WARNING: THIS PROCEDURE SHOULD ONLY BE DONE IN A WELL VENTILATED AREA BECAUSE A SIGNIFICANT AMOUNT OF HYDROGEN GAS MAY BE RELEASED FROM THE BATTERY.**

**CAUTION (1): A CONDITIONING CHARGE IS ONLY NECESSARY IF THE BATTERY FAILS THE CAPACITY TEST. THIS PROCEDURE MAY SHORTEN THE BATTERY'S LIFE IF PERFORMED ON A REPETITIVE BASIS.**

**CAUTION (2): THIS PROCEDURE WILL CAUSE THE BATTERY VOLTAGE TO GO AS HIGH AS 34 VOLTS WHICH COULD DAMAGE ELECTRONIC CIRCUITS CONNECTED TO A BATTERY BUS. DO NOT PERFORM A CONDITIONING CHARGE WHILE THE BATTERY IS INSTALLED IN AN AIRCRAFT.**

**CAUTION (3): IF BATTERY BECOMES HOT (ABOVE 55°C/130°F) DURING CONSTANT CURRENT CHARGING, STOP THE CURRENT AND ALLOW BATTERY TO COOL TO ROOM TEMPERATURE BEFORE CONTINUING THE CHARGE.**

**NOTE: CHARGING EQUIPMENT USED FOR THIS PROCEDURE MUST BE CAPABLE OF OUTPUTTING AT LEAST 34 VOLTS (17 VOLTS FOR 12 VOLT BATTERIES) TO MAINTAIN A CONSTANT CURRENT THROUGHOUT THE ENTIRE CHARGE PERIOD.**

A. Discharge the battery at the C1 rate to an EPV of 20 volts. If the battery has already been discharged to 20 volt EPV, skip this step.
B. Connect the battery to the constant current charging equipment per Table 901.
C. Charge at a constant current rate of C1 /10 (i.e., 4.2 Amps for a 42 Ah battery) for 16 hours and then discontinue charging. The conditioning charge does not need to be continuous, i.e., pauses may be included. For example, an 8 hour charge on the first day followed by an 8 hour charge on the second day is acceptable.
D. After charging, allow the battery to cool down for at least 8 hours or until the battery temperature is within 10°C/18°F of the ambient temperature, then proceed with the capacity test.

9. Deep Discharge Recovery Procedure

**WARNING: THIS PROCEDURE SHOULD ONLY BE DONE IN A WELL VENTILATED AREA BECAUSE A SIGNIFICANT AMOUNT OF HYDROGEN GAS MAY BE RELEASED FROM THE BATTERY.**

**CAUTION (1): THIS PROCEDURE WILL CAUSE THE BATTERY VOLTAGE TO GO AS HIGH AS 34 VOLTS (17 VOLTS FOR 12V BATTERIES) WHICH COULD DAMAGE ELECTRONIC CIRCUITS CONNECTED TO A BATTERY BUS. DO NOT PERFORM A CONDITIONING CHARGE WHILE THE BATTERY IS INSTALLED IN AN AIRCRAFT.**

**CAUTION (2): IF BATTERY BECOMES HOT (ABOVE 55°C/130°F) DURING THE CONDITIONING CHARGE, STOP THE CURRENT AND ALLOW BATTERY TO COOL TO ROOM TEMPERATURE BEFORE CONTINUING THE CHARGE.**

**NOTE: CHARGING EQUIPMENT USED FOR THIS PROCEDURE MUST BE CAPABLE OF OUTPUTTING AT LEAST 34 VOLTS (17 VOLTS FOR 12 VOLT BATTERIES) TO MAINTAIN A CONSTANT CURRENT THROUGHOUT THE ENTIRE CHARGE PERIOD.**

A. Connect the battery to the constant current charging equipment per Table 901.
B. Charge at a constant current rate of C1/10 (i.e., 4.2 Amps for a battery with a C1 rating of 42 Ah) until the battery voltage reaches 31.0 volts, then continue charging at the same constant current rate for an additional 4 hours. The charge cycle should be continuous when using this method, i.e., no pauses should be included. However, if there is an interruption (e.g., due to a local power outage), continue from where the profile stopped and run to completion.

   **NOTE (1): IF THE BATTERY VOLTAGE EXCEEDS 31 VOLTS AT THE BEGINNING OF CHARGE AND THEN DROPS BELOW 31 VOLTS WITHIN 2 HOURS, CONTINUE CHARGING AT CONSTANT CURRENT UNTIL THE VOLTAGE REACHES 31 VOLTS A SECOND TIME. THEN CONTINUE CHARGING FOR AN ADDITIONAL 4 HOURS AS SPECIFIED ABOVE.**

   **NOTE (2): IF THE BATTERY VOLTAGE DOES NOT REACH 31 VOLTS WITHIN 24 HOURS, THE CHARGE SHOULD BE TERMINATED.**

C. After the charge is complete, allow the battery to cool down for at least 8 hours or until the battery temperature is within 10°C/18°F of the ambient temperature, then proceed with the capacity test.

10. Transportation
   A. If the OCV is less than 25.5 volts, charge the battery per Section 6 before shipment.
   B. The battery should be packaged in its original container. If the original container is not available, follow local packaging regulations applicable to the mode of transport.
   C. RG® Series batteries are classified as a “NONSPILLABLE BATTERY” and comply with hazardous shipping exceptions of the International Air Transport Association (IATA) Dangerous Goods Regulations, International Maritime Dangerous Goods (IMDG) Code, and US Department of Transportation (DOT). As such, they can be shipped as non-hazardous by any means when packaged in original container and terminals are protected from short circuit. Refer to battery MSDS for additional information, including shipping paper requirements.

## APPENDIX A – BATTERY MAINTENANCE LOG

| | | | |
|---|---|---|---|
| Concorde Battery P/N: | Battery S/N: | | |
| Date of Initial Installation: | A/C Hours @ Date of Installation: | | |
| | OCV @ Time of Installation: V | | |
| Aircraft Make: | Model: | S/N: | |
| 1st Removal Date: | A/C Hours @ Date of Removal: | | |
| Reason for Removal: | Capacity Check | % | Minutes |
| | | | |
| Date Reinstalled: | A/C Hours @ Date of Reinstallation: | | |
| | OCV @ Time of Reinstallation: V | | |
| Aircraft Make: | Model: | S/N: | |
| 2nd Removal Date: | A/C Hours @ Date of Removal: | | |
| Reason for Removal: | Capacity Check | % | Minutes |
| | | | |
| Date Reinstalled: | A/C Hours @ Date of Reinstallation: | | |
| | OCV @ Time of Reinstallation: V | | |
| Aircraft Make: | Model: | S/N: | |
| 3rd Removal Date: | A/C Hours @ Date of Removal: | | |
| Reason for Removal: | Capacity Check | % | Minutes |
| | | | |
| Date Reinstalled: | A/C Hours @ Date of Reinstallation: | | |
| | OCV @ Time of Reinstallation: V | | |
| Aircraft Make: | Model: | S/N: | |
| 4th Removal Date: | A/C Hours Date of Removal: | | |
| Reason for Removal: | Capacity Check | % | Minutes |
| | | | |
| Date Reinstalled: | A/C Hours Date of Reinstallation: | | |
| | OCV @ Time of Reinstallation: V | | |
| Aircraft Make: | Model: | S/N: | |
| 5th Removal Date: | A/C Hours @ Date of Removal: | | |
| Reason for Removal: | Capacity Check | % | Minutes |
| | | | |
| Date Reinstalled: | A/C Hours Date of Reinstallation: | | |
| | OCV @ Time of Reinstallation: V | | |
| Aircraft Make: | Model: | S/N: | |
| 6th Removal Date: | A/C Hours @ Date of Removal: | | |
| Reason for Removal: | Capacity Check | % | Minutes |
| | | | |